POWER FACTOR CORRECTION

There phase power factor correction capacitors and accessories

CERT. N.9170 ICAR

UNI EN 29001 (ISO 9001)

ICAR

technology looking ahead

INDEX

1. Company profile

2. ICAR means capacitors!

3. Power factor correction.

4. CRTE Power Capacitors

- **4.1** General Description
- **4.2** Technical Data Sheets and Tables
- **4.3** Recommended Connecting Cable Cross Secions
- **4.4** Limits for parallel of CRTE capacitors
- **4.5** Installation and Maintenance
- **4.6** Safety instructions

5. Harmonic Blocking Reactors

- **5.1** Parameters and selection
- **5.2** Technical Data sheets and tables
- **5.3** Recommended connecting scheme
- **5.4** Installation and maintenance
- **5.5** Safety instructions

6. Reactive power controllers

- **6.1** General characteristics
- **6.2** Measure functions
- **6.3** Alarm signals
- **6.4** Led indicators
- **6.5** Contacts
- **6.6** Software

7. Control and Potection Multimeter

8. Thyristor Switches

- **8.1** General characteristics
- **8.2** Technical data sheets and tables
- **8.3** Connecting diagram

1. COMPANY PROFILE

Founded in 1946, ICAR has rapidly reached and constantly maintained a position that is in the vanguard for the research and development of new products in the field of capacitors and components for which capacitors are key parts.
Since the early 60's, ahead of its time, ICAR started the production of metalized polypropylene film capacitors, developing the metallization by its own in order to have the whole manufacturing process under control.
Today ICAR Group is leader in the production of Low and Medium voltage power factor capacitors; by its companies ICAR controls all the manufacturing phases of the capacitor, core business of the group; from the polypropylene film to their metallization, the production of the finished capacitor, L.V. power factor correction switchboards and M.V. banks.
Nowadays ICAR group is made of 6 manufacturing locations all displaced in Europe and the entire direct control of the productive chain is the best quality guarantee of the final product.
Beside L.V. power factor corrector capacitors and associated components, object of this catalogue, ICAR produces:

- lighting capacitors;
- motor run capacitors;
- fixed or automatic L.V. power factor connection banks and active and passive L.V . filters
- power electronics and special capacitors
- M.V capacitors, and capacitor banks
- L.V. and M.V. voltage stabilizers;
- L.V. insulation transformers
- impulses formation lines

2. ICAR MEANS CAPACITORS!

ICAR S.p.A. is synonym of capacitor from 1946, conjugated over its multiple applications.
All along ICAR has believed in the quality of its products and in the strength of the International regulations for the achievements of the high performance standards required for capacitor in industrial applications.
Nowadays ICAR is one of the few companies able to manufacture capacitors starting from the raw material up to the finished product; the entire process is checked in order to obtain a product of high quality level that guarantees its functioning even in the most burdensome plant configurations.
Today ICAR produces different type of capacitors, from the lighting and single phase motor types to the ones for power electronics (electric traction, industrial services) and those of medium voltage.
The various characteristics demanded to these products in terms of electric, mechanical and thermal stress, enabled to find technical solutions that have been applying in other fields with interesting results: for instance the optimization of capacitors for special applications enabled to find very strong solutions that have been then applied on power factor correction capacitors.
The production of the dielectric film (polypropylene or special paper), the metallization process, the production of the capacitor and the construction of the power factor correction banks are fully executed within companies of the Group; that guarantees the achievement of the highest quality standard weather of the metalized film or, consequently, the capacitors manufactured.
Furthermore, the knowhow acquired in almost 50 years of metalized film production, has enabled ICAR to realize absolute innovative products like 3Ut range of capacitors.

Used to deal with International markets ICAR faced the requests of the strictest Certification Bodies and was awarded UNI EN ISO 9001: 2000 Certification,

ICAR periodically takes part to CEI/IEC committees for the compilation of the product regulations, aimed at setting the objective criterions to evaluate capacitors performances and safety. It's constantly in the vanguard and able to anticipate the regulations requirements; in order to ensure the accordance with the International regulations and the most strict customers acceptance criterions, products are submitted to tests in the internal laboratories (where it's possible to test capacitors up to 700 µF and voltage up to 80 kV) and in the greatest internationally recognized laboratories (CESI).

Everything is performed for the safety of the customer who entrusted a reliable partner with a pluridecennal experience in capacitors production for the most disparate applications.


Lightig capacitors


Motor run capacitors


Power electronics capacitors

M.V. capacitors


Automatic P.F.C. bankes


L.V. insulation transformers

3. POWER FACTOR CORRECTION

AN ADVANTAGEOUS CHOICE UNDER THE TECHNOLOGICAL AND ECOLOGICAL PROSPECTIVE

The proper power factor correction of an electric plant, brings to several implications far beyond the simple technical considerations. In an electric plant, the useful energy that is transformed into work is the active energy.
The electric devices that determine a low cos phi, require a quote of ("reactive") energy for their proper functioning that causes a greater load in both the manufacturing power plant and the electric lines that convey the plant up to the user plant.
The power factor correction enables to "produce" the reactive energy within the plant with clearly visible advantage for the user and the electric network behind it.

The proper power factor correction of an electric plant, has, technically, the following advantages:
- Avoid the fines applied by the energy suppliers to the users with low cos phi.
- For new plants, optimize the dimensioning of the plant depending on the actual planned production capability
- For existing plants, recover productive capability without adding/increasing the performances of what already installed (transformers, cables)
- Reduce line voltage drop (that could cause problems in motors starting or plants served by long MV power lines with low short circuit power).
- Reduce energy losses due to Joule effect in transformers and cables

The payback of a power factor correction system often occurs within a little more than a year.

Beside these technical/economical considerations, it can not be forgotten the ecological importance of the power factor correction. In fact, the growing energy demand makes necessary to:
- increase the total power installed by building new generating plants with the resulting environmental impact for pollution emission during their life cycle
- improve the performances of the transmission and distribution networks with the addition of new lines and/or the expansion of the existing ones.

A politic of power factor correction bringing the average Italian cos phi to 0, 95 would make saving, according to preventive estimates, about a million of MWh/year with evident advantage in terms of stress reduction for the power plant park and the energy transmission /distribution network, reducing, at the same time, CO_2 emission of about a million tons.

4. CRTE POWER CAPACITORS

In its power factor correction systems, ICAR uses only capacitors entirely made within the facilities of its group. This way, ICAR guarantees the greater quality of the finished product.
The film used in the CRTE power capacitors comes directly from the ICAR experience in the high performance capacitors, in particular it is defined as
"High density (3Ut type) metalized polypropylene film".

3Ut: High density metalized polypropylene film capacitors

The main difference in comparison to standard polypropylene capacitors is the way in which the dielectric film is metalized.
In standard polypropylene capacitors the thickness of the metal layer deposited on the film surface is constant; in 1995, instead, ICAR has developed a manufacturing process that enables obtaining a metal layer with properly modulated thickness and achieving extraordinary results in the capacitors field for direct current and energy accumulation applications.
Subsequently this technology has been extended to capacitors for alternating current applications, with same remarkable results in power factor correction of industrial facilities.
The modulation of the metallization thickness, considerably betters capacitors performances (and therefore the one of the power factor corrector systems of which they are the basic component) in terms of:
- increased specific power (kvar/dm^3) with resulting reduction of power factor corrector systems dimension;
- improvement of the strengthens to continuous and temporaries overvoltage for a better reliability even in plants with voltage peaks due to the network or manoeuvres on the plant; 3Ut capacitors are in fact tested at three times the rated voltage (type test) from which procedure comes their name;
- better reaction to the internal short circuit thanks to the special metallization with changeable thickness

4.1 GENERAL DESCRIPTION

CRTE is the ICAR last generation of metallized polypropylene film capacitors to be used for power factor correction and harmonic filtering in low voltage plants.
The main features are:
- Three phase windings delta connected in a cylindrical aluminium case;
- Rated power from 2,5kvar up to 30kvar;
- Rated voltage from 230V up to 525V;
- Rated frequency 50 / 60 Hz;
- Terminal board;
- Reduced mounting cost for terminal board connections;
- 100.000 hours service life design;
- Dry, environment friendly construction;
- Suitable for any mounting position (vertical preferable for better cooling);
- Indoor installation;
- Quality system in accordance with ISO 9001 standard.

Applications

- Individual fixed Power Factor Correction for motors, low voltage transformers, etc;
- Low voltage automatic Power Factor Correction Capacitor Banks;
- Low voltage detuned/tuned Capacitor Banks.

Safety

- Self-healing design;
- Over pressure safety device which prevents the capacitor from explosion at the end of its service life;
- Dry technology: as the capacitor is filled with resin, there is no risk of leaking oil or gas;
- Touch proof terminals for terminal board design (IP20 protection degree).

Environment safety

- PCB free.

Damping of Inrush Current

Capacitors used for power factor correction have to withstand a lot of switching operations. The switching of a capacitor in parallel with energized capacitor banks, produces extremely high inrush currents and voltage transients.
The connection of a low voltage power factor correction capacitor without damping to an AC power supply, could lead to a reduced lifetime. For this reason, capacitors should be protected during the switching operation by means of suitable contactors equipped with damping resistors.

Harmonics

Harmonics are sinusoidal voltages and currents with multiple frequencies of the 50 or 60 Hz line frequency. In presence of harmonics the resonance phenomena can be avoided by connecting capacitors in series with reactors (detuned filters).
Components for detuned filter must be carefully selected (see next chapter). Particular care has to be taken for capacitors because the voltage across them will be higher than the nominal voltage when they have a reactor in series.

Discharging

Capacitors must be discharged in 3 minutes to 75V or less.There shall be no switch, fuse or anyother isolating device between the capacitor unit and the discharging device. ICAR supplies capacitor discharge resistors to all series.

4. CRTE POWER CAPACITORS

4.2 TECHNICAL DATA SHEETS AND TABLES

TECHNICAL CHARACTERISTICS	
• Dielectric	polypropylene metallized film
• Winding connection	delta
• Safety device	Internal overpressure disconnector
• Capacitance tolerance	-5%, +10%
• Rated Voltage	230V, 400V/415V, 450V, 480V/525V
• Rated Frequency	50 / 60 Hz
• Over voltages	According to IEC
•	Un + 10% (up to 8 hours daily)
•	Un + 15% (up to 30 minutes daily)
•	Un + 20% (up to 5 minutes daily)
•	Un + 30% (up to 1 minute daily)
• Over current	In + 30% (including harmonics)
• Maximum inrush current	200 In
• Insulation level	3 / 15 kV
• Voltage test between terminals	2,15 Un, 50Hz, 10 seconds (routine test)
• Voltage test between terminals	3,00 Un, 50Hz, 60 seconds (type test)
• Voltage test terminals/case	3000V, 50Hz, 10 seconds
• Dielectric losses	< 0.2 W/kvar
• Temperature class	-25/D
• Cooling	Natural air of forced ventilation
• Permissible humidity	95%
• Service life	100.000 operating hours
• Altitude above sea level	2000 m
• Impregnation	resin filled, PCB free
• Terminals	Terminal board
• Fixing and Ground	Threaded M12 stud on case bottom
• Mounting position	vertical preferable for better cooling
• Protection degree	IP20
• Installation	Indoor
• Discharge resistors	Included
• Discharge time	< 3 minutes to 75V or less
Applicable standards	IEC 60831-1/2

Vn = 400V(415V)

ORDER CODE	Q POWER (kvar) 50 Hz	Q POWER (kvar) 60 Hz	C Capacity (µF)	In Current (A)	H Heigh (mm)	D diameter (mm)	Weight (Kg)	Pcs/box	Box dimensions	Discharge resistor
CRTE07520805040	5	6	3x 33.2	3x 7.2	208	75	1	4	370x370x110	YES
CRTE07520807540	7.5	9	3x 49.7	3x10.8	208	75	1.2	4	370x370x110	YES
CRTE08520810040	10	12	3x 66.3	3x14.4	208	85	1.2	4	370x370x110	YES
CRTE08520812540	12.5	15	3x 82.9	3x18.0	208	85	1.4	4	370x370x110	YES
CRTE10020815040	15	18	3x 99.5	3x21.7	208	100	1.6	4	370x370x110	YES
CRTE10020820040	20	24	3x132.6	3x28.9	208	100	2	3	370x370x131	YES
CRTE11620825040	25	30	3x165.8	3x36.1	208	116	2.4	3	370x370x131	YES
CRTE11620830040	30	36	3x198.9	3x43.3	208	116	2.6	3	370x370x131	YES

Vn = 450V

ORDER CODE	Q POWER (kvar) 50 Hz	Q POWER (kvar) 60 Hz	C Capacity (µF)	In Current (A)	H Heigh (mm)	D diameter (mm)	Weight (Kg)	Pcs/box	Box dimensions	Discharge resistor
CRTE07520805045	5	6	3x 26.2	3x 6.4	208	75	1	4	370x370x110	YES
CRTE07520807545	7.5	9	3x 39.3	3x9.6	208	75	1.2	4	370x370x110	YES
CRTE08520810045	10	12	3x 52.4	3x12.8	208	85	1.2	4	370x370x110	YES
CRTE08520812545	12.5	15	3x 65.5	3x16.0	208	85	1.4	4	370x370x110	YES
CRTE10020815045	15	18	3x 78.6	3x19.2	208	100	1.6	4	370x370x110	YES
CRTE10020820045	20	24	3x104.8	3x25.7	208	100	2	3	370x370x131	YES
CRTE11620825045	25	30	3x131.0	3x32.1	208	116	2.4	3	370x370x131	YES
CRTE11620830045	30	36	3x157.2	3x38.5	208	116	2.6	3	370x370x131	YES

Vn = 525V (480V)

ORDER CODE	Q POWER (kvar) 50 Hz	Q POWER (kvar) 60 Hz	C Capacity (µF)	In Current (A)	H Heigh (mm)	D diameter (mm)	Weight (Kg)	Pcs/box	Box dimensions	Discharge resistor
CRTE07520805052	5	6	3x 19.2	3x 5.5	208	75	1	4	370x370x110	YES
CRTE07520807552	7.5	9	3x 28.9	3x 8.2	208	75	1.2	4	370x370x110	YES
CRTE08520810052	10	12	3x 38.5	3x11.0	208	85	1.2	4	370x370x110	YES
CRTE08520812552	12.5	15	3x 48.1	3x13.7	208	85	1.4	4	370x370x110	YES
CRTE10020815052	15	18	3x 57.7	3x16.5	208	100	1.6	4	370x370x110	YES
CRTE10020820052	20	24	3x 77.0	3x22.0	208	100	2	3	370x370x131	YES
CRTE11620825052	25	30	3x 96.2	3x27.5	208	116	2.4	3	370x370x131	YES
CRTE11620830052	30	36	3x115.5	3x33.0	208	116	2.6	3	370x370x131	YES

Vn = 230V 60 Hz

MODEL	Q POWER (kvar) 50 Hz	Q POWER (kvar) 60 Hz	C Capacity (µF)	In Current (A)	H Heigh (mm)	D diameter (mm)	Weight (Kg)	Pcs/box	Box dimensions	Discharge resistor
CRTE08520806023	5	6	3x 100	3x15.0	208	85	1.2	4	370x370x110	YES
CRTE10020809023	7,5	9	3x 150	3x22.6	208	100	1.6	4	370x370x110	YES
CRTE10020812023	10	12	3x 200	3x30.0	208	100	2	3	370x370x131	YES
CRTE11620815023	12.5	15	3x 250	3x37.6	208	116	2.6	3	370x370x131	YES

4. CRTE POWER CAPACITORS

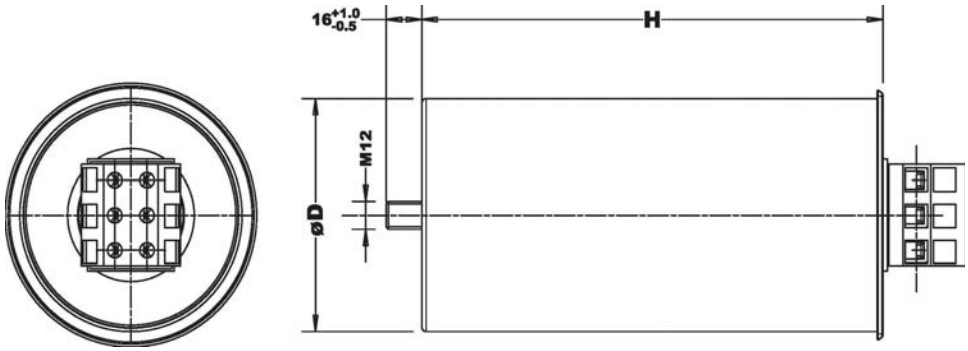

4.3 RECOMMENDED CONNECTING CABLE CROSS SECTION

Rated voltage 415V, 50 Hz

RATED POWER Qn [kvar]	In [A]	CROSS SECTION mm² Cu
2.5	3.5	2.5
5	7	2.5
7.5	10.5	2.5
10	13.9	4
12.5	17.4	4
15	20.9	6
20	27.8	10
25	34.8	16
40	55.6	25

The table is a guidelines for operation in normal conditions at ambient temperature up to 40°C (or 55°C capacitor sorroundig air). Various parameter such us harmonics, temperature inside the cabinet, cable length… have to be considered for proper selection.

4.4 LIMITS FOR PARALLEL OF CRTE CAPACITORS

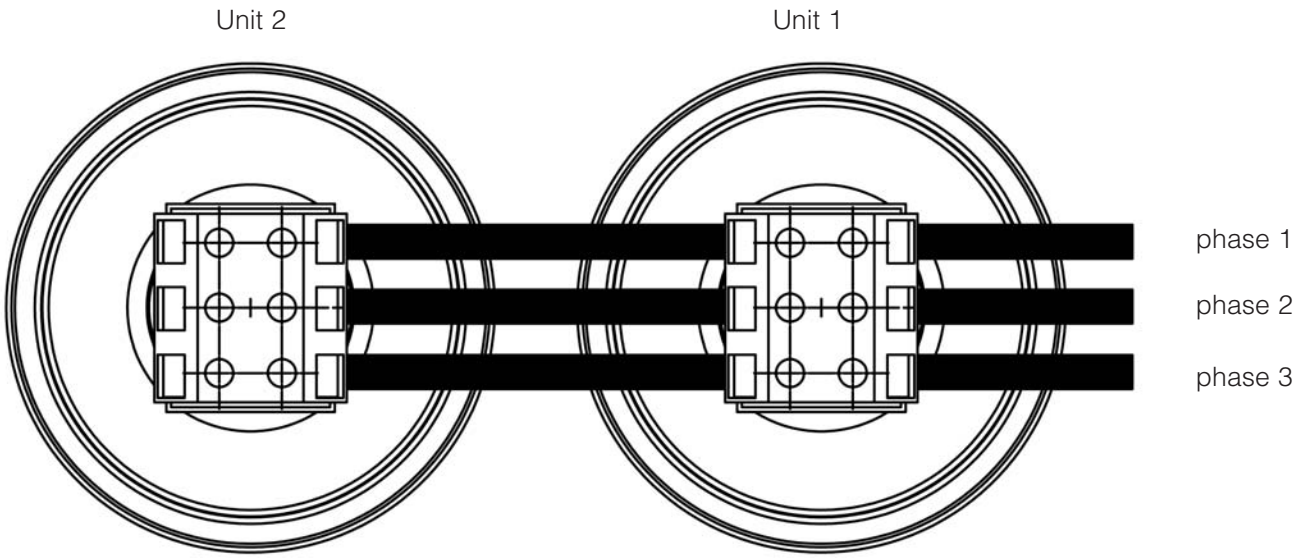

The **maximum number of parallel connected units** should not have a total output higher than 40kvar. The cross section of cables in the Unit 1 (phase 1, 2, 3) have to be selected considering the total amount of the Unit 1 and Unit 2 output.
Leave enough space to allow longitudinal expansion of the can for proper operation of the internal over pressure safety device (15 mm).
A minimum space of 20 mm between capacitors is necessary to ensure **proper cooling.**

4.5 INSTALLATION AND MAINTENANCE

Handling and Storage

Capacitors shall have to be handled and stored with care in order to avoid any mechanical damage during transportation. Protection against environmental influences shall also be taken.

Installation

Capacitors are suitable for indoor installation and for any mounting position. Vertical is preferable for better coolig.
Capacitors must be installed in such a way that the specified limit temperature is not overcome.
Not being in compliance with the above instructions will result as a reduction of the expected service life.
Installation of capacitors shall have to be performed in such a way that any dangerous resonance phenomena due to harmonics is avoided.

Automatic power factor correction banks

The switching of a capacitor bank in parallel with energized capacitor(s), produces extremely high inrush currents and voltage transients. For this reason, it is extremely important to wait for the unit discharge before a new switching.

Assembly

Capacitors shall have to be assembled by means of the threaded M12 bottom stud. The maximum applicable tightening torque is 10Nm.

The catalogue specifies the recommended cross section of the supplying cables. The suggested tightening torque is 3Nm. With terminals screw design two antagonist spanners shall be used.
In order to ensure a proper operation of the internal overpressure safety device, an extra minimum 15mm clearance distance between the upper part of capacitors and assembly enclosures shall have to be provided.
Capacitors shall be placed in such a way that there is an adequate dissipation by convection and radiation of the heat produced by the capacitor losses. The ventilation of the operating room and the arrangement of the capacitor units shall provide good air circulation around each unit. A minimum 20mm distance between the units has to be maintained.

Maintenence

Periodical checks and inspections are required to ensure reliable operation of capacitors. Monitoring and recording of the electrical service parameters are also recommended to become acquainted with progressive capacitors stress conditions.

Protections

Capacitors shall have to be protected against inrush peak currents during switching operations of automatic banks by means of suitable contactors equipped with pre-making resistors.

4.6 SAFETY INSTRUCTIONS

DO NOT MISAPPLY CAPACITORS FOR POWER FACTOR CORRECTION APPLICATIONS
Capacitors according to the Standards, are equipped with a suitable discharge device such as discharge resistors, permanently connected. They are able to reduce the residual voltage across capacitor terminal to less than 75 V within 3 minutes or better.

DO NOT TOUCH ANY CAPACITOR TERMINAL IF NOT SHORT CIRCUITED AND EARTHED IN ADVANCE
To prevent damage to people and goods due to improper usage and/or application of capacitors, the
"RECOMMENDATION FOR THE SAFE USE OF STATIC CAPACITORS, BANKS AND EQUIPMENT FOR POWERFACTOR CORRECTION"
published by ANIE shall have to be strictly respected.
ICAR is not responsible for any kind of possible damages occurred to people or things, derived from the improper installation and application of Power Factor Correction capacitors

Most common misapplication forms

- Current, voltage, harmonics and frequency above specification;
- Working or storage temperature beyond the specified limits;
- Unusual service conditions as mechanical shock and vibrations, corrosive or abrasive conductive parts in cooling air, oil or water vapour or corrosive substances, explosive gas or dust, radioactivity, excessive and fast variations of ambient conditions, service areas higher than 2000 m above sea level...

In case of doubt in choice or in performances of the capacitors ICAR technical service MUST be contacted.

Personal Safety

Electrical or mechanical misapplications of CRT capacitors may become hazardous. Personal injury or property damage may result from disruption of the capacitor and consequent expulsion of melted material.
Before using the capacitors in any application, please read carefully the technical information contained in this catalogue.
The energy stored in a capacitor may become lethal. The capacitor should be short circuited and earthed before handling to prevent any chance of shock.
Special attention must be taken to make sure the capacitors are correctly used for each application and that warnings and instructions are strictly followed.
Capacitors are made with polypropylene that is a flammable material. The risk of fire cannot be totally eliminated; therefore suitable precautions shall be taken. Reliability data quoted by ICAR should be considered as statistical i.e. based on a number of components, and does not guarantee properties or performance in the legal sense. ICAR liability is limited to the replacement of defective components.
This applies in particular to consequential damage caused by component failure.

5. HARMONIC BLOCKING REACTORS

The growing use of power electronic devices is causing an increasing level of harmonic distortion in the electrical systems, which frequently leads to problems with capacitor installations. This is the reason why energy suppliers and actual conditions require the usage of harmonic blocking reactors.
A detuned capacitor system works out the function of power factor correction whilst preventing any amplification of harmonic currents and voltages caused by resonance between capacitor and inductance impedances of the electrical system.
By adding an appropriately rated series reactor to the power capacitor, both elements form a low-pass resonant circuit (usually below the 5th) which prevents higher order harmonics to flow into capacitors.

ICAR harmonic blocking reactors are made of high-class transformer sheets and aluminiun coils. They are fully manufactured at our premises, dried and impregnated in a vacuum with environmentally-friendly, low-styrole resin which ensures high voltage withstand, low noise levels, and enjoys a long operating life.

5.1 PARAMETERS AND SELECTION

Coupling of Capacitors and Reactors

Combination of capacitors and reactors is a delicate procedure which has to be properly done. The scheme ICAR is proposing in tables below comes from its experience in the Automatic Power Factor Correction systems design and manufacturing and it considers all of the aspects involved, such as:
- Voltage increase across capacitor terminals
- Allowable harmonic olverload of reactors and capacitors
- Actual reactive power output

It is then warmly recommended to respect the proposed coupling of capacitance and reactance, as well as capacitor rated voltage.

Detuning frequency [fi]

Harmonic blocking reactor choice is based on the actual harmonic current spectrum; the most relevant and lowest harmonic current determines the harmonic blocking frequency, hence the reactor selection. In detail
- 140Hz will be used if THD in current is substantial higher than 60%,
- 189Hz or 215Hz will be applied if 5th harmonic currents and above are the main components of the THD.

Rated inductance [L]

Inductance rating of reactor, measured at rated current In, epressed in mH (Milli-Henry) is the main component feature.

Capacitance [C]

It comes from the delta connection of three single phase capacitive elements. Stated value is the multiple by three of each element and it expressed in µF (micro Farad).

Capacitor Rated Voltage [V]

The series connection of capacitor and reactor causes a voltage rise at the capacitor terminals as described by the following formula which must be considered when selecting a capacitor for the application

$$U_C = \frac{U_N}{\left[1 - \frac{p}{100\%}\right]}$$

where

$$p = 100\% \cdot \frac{X_L}{X_C}$$

examples:

Detung factor p	Resonance frequency f_r f_N = 50 Hz	f_N = 60 Hz
5,67%	210 Hz	227 Hz
7%	189 Hz	252 Hz
14%	134 Hz	–

Rated capacitor power [Q]

The rated capacitor output is defined as the power the capacitor can generate if fed at rated voltage; it is important to follow the manufacturer recommendation in terms of voltage selection.
This parameter also makes easier the selection of proper CRTE capacitor in series to reactor.

Real output [Qc]

Actual capacitor output is increased respect to the rated value by the higher voltage at capacitor ends. However this effect is already incorporated in the table Qc Reactive Power.

RMS Current Ieff [Irms]

Actual load flowing on the reactor in permanent operation, it is composed by the fundamental wave plus harmonic currents. Component selections described in this catalogue are made in respect to the maximum reactor and capacitor allowed manufacturer limits.

5.2 TECHNICAL DATA SHEETS AND TABLES

TECHNICAL CHARACTERISTICS	
Applicable standards	CEI-EN 60289 IEC 60289
Rated voltages	230...700V
Rated frequencies	50/60 Hz
Tolerance of inductance	±5%(mean value across three phases)
Linearity	I lin= 1.6…2.0 In
Insulation (winding-core)	3 kV
Temperature class	F (100°C)
Maximum Ambient Temperature	40°C
Protection class	IP00 indoor mounting
Humidity	95%
Cooling	natural
Design	Three phase, iron core double air gap
Winding material	Aluminium foil/copper wires
Impregnation	Polyester resin, class H
Terminals	Terminal blocks, or cable lugs.
Temperature Switch	All reactors are provided with a separate screw terminal for the temperature switch (opening switch) which is located inside everyl coil
Switching temperature	140°C
Voltage	250Vac (<5A)
Tolerance	±5K

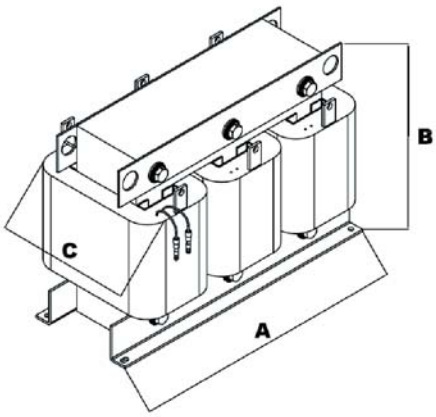

ALUMINIUM

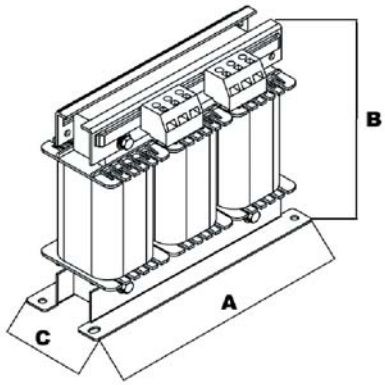

COPPER

Vn = 400V - fi = 215 Hz - f = 50 Hz - p = 5,4%

Order Code	Qc at 400V (kvar)	L (mH)	Irms (A)	Material	Dimensions (AxBxC) (mm)	Weight (Kg)	Qc at rated voltage (kvar)	Capacitor rated voltage (V)	Capacitance (µF)
46015810	5	5,8	8	copper	205x167x68	7	7,5	450	112,5
46012910	10	2,9	16	copper	205x164x68	8,6	12,5	450	196
46012401	12,5	2,4	19	copper	205x184x68	6	15	450	236
46011451	20	1,45	32	copper	205x184x88	9,5	25	450	393
	25	1,22	39	copper	180x180x170	11,6	30	450	471
PRG0030DAB57579	40	0,73	65	aluminium	320x220x110	18	50	450	786
PRG0037DAB57692	50	0,6	78	aluminium	320x220x130	20	60	450	942

Vn = 400V - fi = 189 Hz - f = 50 Hz - p = 7%

Order Code	Qc at 400V (kvar)	L (mH)	Irms (A)	Material	Dimensions (AxBxC) (mm)	Weight (Kg)	Qc at rated voltage (kvar)	Capacitor rated voltage (V)	Capacitance (µF)
46016300	5	6,3	19	copper	205x170x115	13,5	7,5	450	112,5
46014200	10	4,2	17	copper	205x181x79	7,7	12,5	450	196
	12,5	3,03	21	copper	180x180x150	11	15	450	236
PRG0028DAB57538	20	1,73	40	aluminium	320x220x120	17	25	450	393
PRG0025DAB57568	25	1,572	41	aluminium	320x220x120	17	30	450	471
PRG0056DAB57524	40	0,865	80	aluminium	320x220x145	27	50	450	786
PRG0050DAB57567	50	0,786	79	aluminium	320x220x140	25,5	60	450	942

5. HARMONIC BLOCKING REACTORS

5.2 TECHNICAL DATA SHEETS AND TABLES

Vn = 400V - fi = 140 Hz - f = 50 Hz - p = 12,7%

Order Code	Qc at 400V (kvar)	L (mH)	Irms (A)	Material	Dimensions (AxBxC) (mm)	Weight (Kg)	Qc at rated voltage (kvar)	Capacitor rated voltage (V)	Capacitance (µF)
46021480	5	14,8	9	copper	205x170x78	7,4	7,5	525	87
46017400	10	7,4	18	copper	205x180x113	12,8	15	525	173
46016300	12,5	6,3	19	copper	205x170x113	13,5	20	525	231
PRG0042DAB57551	20	3,7	35	aluminium	320x220x120	21	30	525	345
PRG0047DAB57427	25	3,13	38	aluminium	320x220x120	22	35	525	404
PRG0078DAB57592	40	2,056	63	aluminium	320x220x155	34	60	525	692
PRG0093DAB57418	50	1,57	77	aluminium	380x220x165	37	75	525	865

Vn = 380V - fi = 60 Hz - f = 227 Hz - p = 7%

Order Code	Qc at 400V (kvar)	L (mH)	Irms (A)	Material	Dimensions (AxBxC) (mm)	Weight (Kg)	Qc at rated voltage (kvar)	Capacitor rated voltage (V)	Capacitance (µF)
46016300	5	6,3	19	copper	205x170x115	13,5	6	450	78
46012910	10	2,9	16	copper	205x184x68	8,6	12	450	157
46012600	12,5	2,6	27	copper	205xx184x98	11	15	450	196
46011451	20	1,45	32	copper	205x184x88	9,5	24	450	314
	25	1,22	39	copper	180x180x170	13,6	30	450	393
PRG0030DAB57579	40	0,73	65	aluminium	320x220x110	18	54	450	707
PRG0037DAB57692	50	0,6	78	aluminium	320x220x130	20	66	450	864

Vn = 400V - fi = 60 Hz - f = 245 Hz - p = 6%

Order Code	Qc at 400V (kvar)	L (mH)	Irms (A)	Material	Dimensions (AxBxC) (mm)	Weight (Kg)	Qc at rated voltage (kvar)	Capacitor rated voltage (V)	Capacitance (µF)
46015810	5	5,8	8	copper	205x167x68	7	6	450	78
46012600	10	2,6	27	copper	205xx184x98	11	12	450	157
	12,5	1,8	26	copper	180x180x130	8	18	450	236
	20	1,31	30	copper	180x180x140	9,7	24	450	314
	25	1,05	44	copper	180x180x150	11,4	30	450	393
PRG0037DAB57692	40	0,6	78	aluminium	320x220x130	20	54	450	707
PRG0035DAB57693	50	0,45	88	aluminium	320x220x130	19,5	66	450	864

Vn = 230V - fi = 60 Hz - f = 227 Hz - p = 7%

Order Code	Qc at 400V (kvar)	L (mH)	Irms (A)	Material	Dimensions (AxBxC) (mm)	Weight (Kg)	Qc at rated voltage (kvar)	Capacitor rated voltage (V)	Capacitance (µF)
46012100	5	2,1	33	copper	205x180x113	13,3	15	400	249
	10	1,04	35	copper	180x180x130	7,9	30	400	497
	12,5	0,82	37	copper	180x180x130	8	12	230	602
PRG0037DAB57692	20	0,6	78	aluminium	320x220x130	20	54	400	896
PRG0035DAB57693	25	0,45	88	aluminium	320x220x130	18,5	24	230	1204
PRG0033DAB57694	40	0,273	106	aluminium	320x220x120	18,5	36	230	1806
PRG0043DAB57695	50	0,2	170	aluminium	320x220x135	21,5	48	230	2408

Vn = 230V - fi = 60 Hz - f = 252 Hz - p = 5,67%

Order Code	Qc at 400V (kvar)	L (mH)	Irms (A)	Material	Dimensions (AxBxC) (mm)	Weight (Kg)	Qc at rated voltage (kvar)	Capacitor rated voltage (V)	Capacitance (µF)
	5	1,6	15	copper	180x180x120	5,7	15	400	249
	10	0,82	37	copper	180x180x130	8,2	30	400	497
	12,5	0,66	36	copper	180x180x120	6,8	12	230	602
PRG0035DAB57693	20	0,45	88	aluminium	320x220x130	19,5	54	400	896
PRG0024DAB57696	25	0,282	86	aluminium	320x220x115	16	24	230	1204
PRG0026DAB57697	40	0,22	106	aluminium	320x220x120	16,5	36	230	1806
PRG0035DAB57698	50	0,167	144	aluminium	320x220x130	19,5	48	230	2408

5.3 RECOMMENDED CONNECTING SCHEME

Reactors shown in this catalogue are designed for the following scheme of wiring.

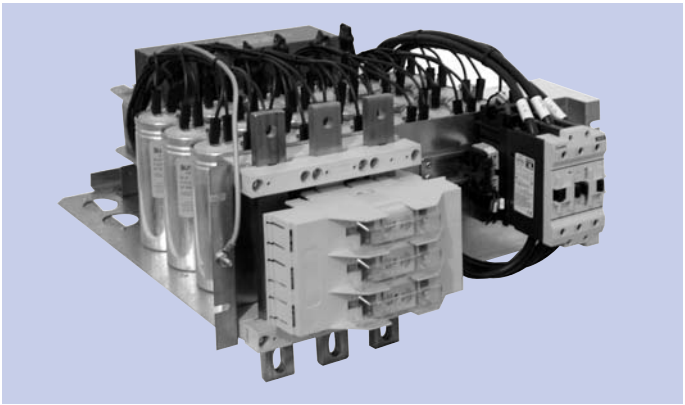

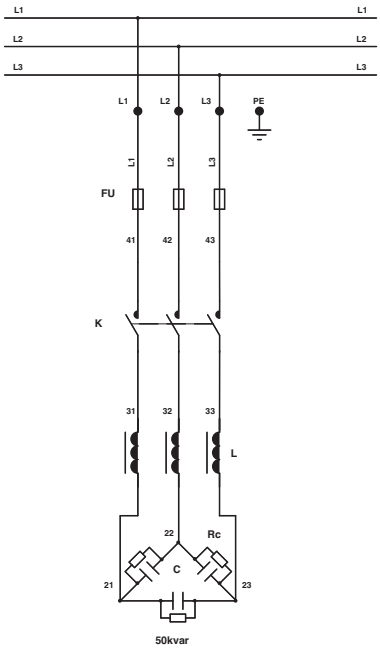

5.4 INSTALLATION AND MAINTENANCE

Handling and Storage

Reactors shall have to be handled and stored with care in order to avoid any mechanical damage during transportation. Protection against environmental influences shall also be taken.

Installation

Reactors are suitable for indoor installation and for vertical position. Reactors must be installed in such a way that the specified limit temperature is not overcome.
Not being in compliance with the above instructions will result as a reduction of the expected service life.

Assembly

Total losses are sum of all iron, winding, and stray field losses at max. specified over voltage and harmonic content. Depending on the detuning factor, actual dissipation power of our reactors is between 4 and 6W/kvar.
While using capacitors and reactors within a capacitor bank, suitable means for heat dissipation and cooling of components shall be taken.
A minimum 20mm distance between the units has to be maintained.

Maintenence

Periodical checks and inspections are required to ensure reliable operation of reactors. Monitoring and recording of the electrical service parameters are also recommended to become acquainted with progressive reactors stress conditions.

Protections

Temperature Switch All reactors are provided with a separate screw terminal for the temperature switch (opening switch) which is located inside everyl coil. These leads shall be wired in series to contactor coils to switch off in case of over load.

5.5 SAFETY INSTRUCTIONS

DO NOT MISAPPLY REACTORS FOR POWER FACTOR CORRECTION APPLICATIONS

To prevent damage to people and goods due to improper usage and/or application of reactors, the
“RECOMMENDATION FOR THE SAFE USE OF STATIC CAPACITORS, BANKS AND EQUIPMENT FOR POWERFACTOR CORRECTION”
Published by ANIE shall have to be strictly respected.

ICAR is not responsible for any kind of possible damages occurred to people or things, derived from the improper installation and application of Power Factor Correction capacitors and reactors.

Most common misapplication forms

- Current, voltage, harmonics and frequency above specification;
- Working or storage temperature beyond the specified limits;
- Unusual service conditions as mechanical shock and vibrations, corrosive or abrasive conductive parts in cooling air, oil or water vapour or corrosive substances, explosive gas or dust, radioactivity, excessive and fast variations of ambient conditions, service areas higher than 2000 m above sea level...

In case of doubt in choice or in performances of the capacitors and reactors ICAR technical service MUST be contacted.

Personal Safety

Electrical or mechanical misapplications of Harmonic Blocking Reactors capacitors may become hazardous.
Special attention must be taken to make sure the reactors are correctly used for each application and that warnings and instructions are strictly followed.
Reactors are made not only but also with iron, aluminium, paper and resin that are partially flammable materials. The risk of fire cannot be totally eliminated; therefore suitable precautions shall be taken.
Reliability data quoted by ICAR should be considered as statistical i.e. based on a number of components, and does not guarantee properties or performance in the legal sense. ICAR liability is limited to the replacement of defective components.
This applies in particular to consequential damage caused by component failure.

6. REACTIVE POWER CONTROLLERS

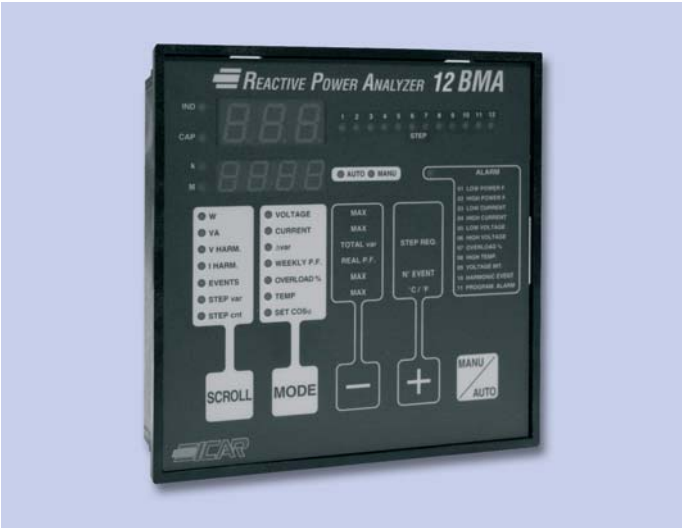

The reactive power controller is a basic component for the good functioning of an automatic capacitor bank: in fact it represents the "intelligent" part of the system being designed to control load conditions; upon the check results, it decides the activation of the right available capacitor banks in order to keep the power factor within the set limits.

RPC and RPA reactive power controllers proposed by ICAR and used in ICAR automatic power factor correction systems are designed to guarantee the desired power factor by optimizing the stress on capacitors batteries.
ICAR controllers offer important functions to maintain and run a power factor correction system in order to maximize the length of its life and solve the plant problems that could bring to a reduction of its working life.
Beside all RPC regulators characteristics, RPA offer more measure functions and the possibility of communication via serial output RS485.
For power factor correction systems or rather with static switching suitable for the power factor correction of plants with sudden load changes (welders, mixers, mills, etc), are available RPE special controllers.
All regulators are able to set cos phi between 0,8 inductive and 0,8 capacitive and functioning even in cogeneration plant.

6.1 GENERAL CHARCTERISTICS

ICAR power reactive controllers are managed by a microprocessor and propose many functions while keeping a simple functioning and parameterization modality either locally or by PC via serial port RS 232 of which all standard versions are equipped.
It will be possible changing all parameters to customize the functioning. Accordingly to the real characteristics of the plant that needs power factor correction, (cos phi threshold sensitivity, steps switching speed, etc).
The controller can function in automatic or manual modality. In the first case it will work in complete autonomy by switching on and off the available capacitor banks until the desired cos phi will be reached; in the second case the operator will force the switching on and off of batteries.
The controller will supervise on the discharge times in order to prevent operations that could potentially damage the capacitors.
ICAR controllers are also equipped with the powerful AUTO SET UP function, which enables the regulator self-configuration accordingly with the real characteristics of the capacitor bank batteries; this function is particularly convenient when is needed the replacement of an existing capacitor bank controler.

6.2 MEASURE FUNCTIONS

ICAR controllers in standard edition give many measurements to verify and monitor the correct functioning and the condition of the system. On the front display are viewed
- Voltage
- Current
- Missing kvar
- Average weekly power factor
- Harmonic distortion rate % (THDI %) on capacitors
- Temperature

The regulator memorizes the greater value for each of those measures to evaluate which one created the heaviest capacitors stress on the switchboard, starting from the last reset: temperature, voltage and harmonic distortion rates have a strong impact on capacitors since, if they are constantly over the nominal value, the working life could be drastically reduced.
The controller is also equipped for the measurement of the real reactive power supplied by the single banks and adjust the steps switching programme; this characteristic is useful for power factor correction switchboards in use since long time and therefore with old capacitors.
By connection to serial outpur RS232, is possible to have the use of many other information useful to evaluate the status of the system in order to schedule ordinary and extraordinary maintenance like contactors control/replacement:
- Number of manoeuvres executed by each step
- Number of working hours of each step
- Number of switchings executed by manual mode

6.3 ALARM SIGNALS

ICAR controllers, in their standard version, offer nine different alarm signals, set on the following measures:
- Under compensation
- Overcompensation
- Min current
- Max current
- Min voltage
- Max voltage
- Max THD
- Max Temperature
- Micro interruptions

6.4 LED INDICATORS

The led who are present on the controllers display, offer the following information:
- Functioning modality automatic/manual
- Status of each battery (ON/OFF)
- Cos phi determination inductive/capacitive
- Type of measure visualized on the display

6.5 CONTACTS

The controllers have the use of electric contacts for the steps switching, for the working of an eventual cooling fan and for the remote control of alarm signals.
The contacts available can be programmed with NO or NC logic

6. REACTIVE POWER CONTROLLERS

6.6 SOFTWARE

Every ICAR controller can exchange data with PC by means of RS232 netport and relevant Software. It makes quicker the controller set-up, by susing stored and premade settings. and it turns easier the checking of regulator and capacitor bank pharameters.
All of the controller display information is repeated on the sofware main window and detailed step life conditions are also shown.

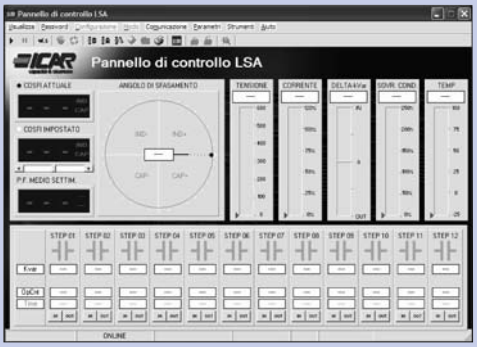

RPC

Generalities

- Microprocessor Power Factor Correction relays
- Supply ON indication led
- IND or CAP power factor indication led
- Step indication led
- Terminal strip connection
- Relays 250Vac-5A
- Relays 415Vac –1,3A
- CEI EN 61010-1 CEI EN 50081-2 CEI EN 50082-2 Applicable standards

TYPE	RPC 5LSA	RPC 7LSA	RPC 8BSA	RPC 12BSA
CODE	A25060046413052	A25060046413070	A25060046416080	A25060046416120
AUX. SUPPLY VOLTAGE	380÷415V	380÷415V	380÷415V	380÷415V
FREQUENCY	50Hz / 60Hz	50Hz / 60Hz	50Hz / 60Hz	50Hz / 60Hz
MEASURE VOLTAGE CIRCUIT	Taken from aux. supply	Taken from aux. supply	Taken from aux. supply	*Taken from aux. supply*
MEASURE CURRENT CIRCUIT	5 A (1A on request)	5 A (1A on request)	5 A (1A on request)	5 A (1A on request)
BURDEN	6,2VA	6,2VA	5VA	5VA
C/K PARAMETER SET POINT	Automatic	Automatic	Automatic	Automatic
COSφ SET POINT	From 0.8 lag to 0.8 lead	From 0.8 lag to 0.8 lead	From 0.8 lag to 0.8 lead	From 0.8 lag to 0.8 lead
DISPLAY	Single	Single	Single	Single
CONNECTION TIME	5 sec. ÷ 600 sec.	5 sec. ÷ 600 sec.	5 sec. ÷ 600 sec.	5 sec. ÷ 600 sec.
OUTPUT RELAYS	5	7	8	12
ALARM RELAY	Yes	Yes	Yes	Yes
PROTECTION DEGREE	IP55	IP55	IP41	IP41
WEIGHT	0.44Kg	0.46Kg	0.74Kg	0.77Kg
WORKING TEMPERATURE	-20°C÷+60°C	-20°C÷+60°C	-20°C÷+60°C	-20°C÷+60°C
STORAGE TEMPERATURE	-30°C÷+80°C	-30°C÷+80°C	-30°C÷+80°C	-30°C÷+80°C
RS 232 SERIAL PORT	Yes	Yes	Yes	Yes
RS 485 SERIAL PORT	NO	NO	NO	NO
TEMPERATURE CONTROL	Yes	Yes	Yes	Yes
3 PHASE MULTIMETER FUNCTIONS	NO	NO	NO	NO
EXTERNAL TEMP.SENSOR INPUT	NO	NO	NO	NO
DIMENSIONS (SEE FOLLOWING PAGES)	145	145	146	146

6. REACTIVE POWER CONTROLLERS

RPA/RPE

Generalities

- Microprocessor Power Factor Correction relays
- Supply ON indication led
- IND or CAP power factor indication led
- Insertion step indication led
- Terminal strip connection
- Relays 250Vac-5A
- Relays 415Vac –1,3A
- CEI EN 61010-1 CEI EN 50081-2 CEI EN 50082-2 Applicable standards

TYPE	RPA 8BMA	RPA 12BMA	RPE 12BTA
CODE	A25060046416082	A25060046416126	A25060046416124
AUX. SUPPLY VOLTAGE	110V ÷127V 220V ÷240V	110V ÷127V 220V ÷240V	110V ÷127V 220V ÷240V
FREQUENCY	50Hz / 60Hz	50Hz / 60Hz	50Hz / 60Hz
MEASURE VOLTAGE CIRCUIT	100÷690V	100÷690V	100÷690V
MEASURE CURRENT CIRCUIT	5 A (1A on request)	5 A (1A on request)	5 A (1A on request)
BURDEN	9,7VA	9,7VA	9,7VA
C/K PARAMETER SET POINT	Automatic	Automatic	Automatic
COSφ SET POINT	From 0.8 lag to 0.8 lead	From 0.8 lag to 0.8 lead	From 0.8 lag to 0.8 lead
DISPLAY	Two	Two	Two
CONNECTION TIME	5 sec. ÷ 600 sec.	5 sec. ÷ 600 sec.	0 millisec. ÷ 250 millisec.
OUTPUT RELAYS	8	12	10 (solid state relay)
ALARM RELAY	Yes	Yes	Yes
PROTECTION DEGREE	IP41	IP41	IP41
WEIGHT	0.94Kg	0.94Kg	0.94Kg
WORKING TEMPERATURE	-20°C÷+60°C	-20°C÷+60°C	-20°C÷+60°C
STORAGE TEMPERATURE	-30°C÷+80°C	-30°C÷+80°C	-30°C÷+80°C
RS 232 SERIAL PORT	Yes	Yes	Yes
RS 485 SERIAL PORT	Yes	Yes	Yes
TEMPERATURE CONTROL	Yes	Yes	Yes
3 PHASE MULTIMETER FUNCTIONS	Yes	Yes	Yes
EXTERNAL TEMP.SENSOR INPUT	Yes	Yes	Yes
DIMENSIONS (SEE FOLLOWING PAGES)	146	146	146

6. REACTIVE POWER CONTROLLERS

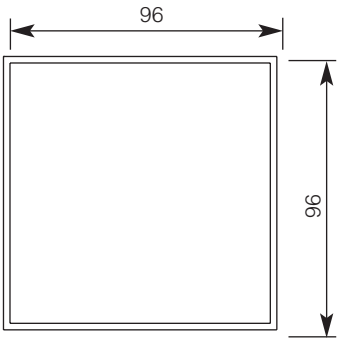

DIMENSIONI DI INGOMBRO
OVERALL DIMENSIONS

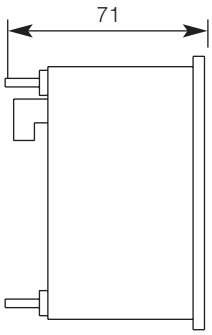

PROFONDITA'
DEPTH

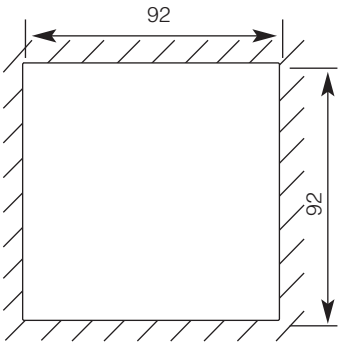

FORATURA
DRILLING

144

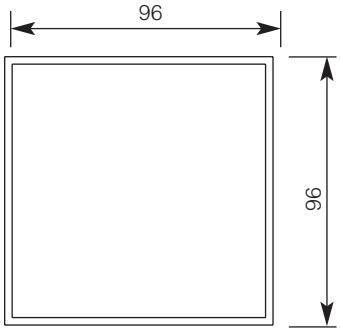

DIMENSIONI DI INGOMBRO
OVERALL DIMENSIONS

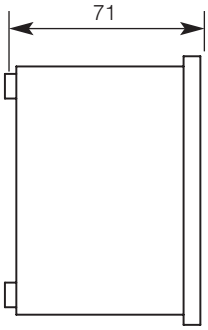

PROFONDITA'
DEPTH

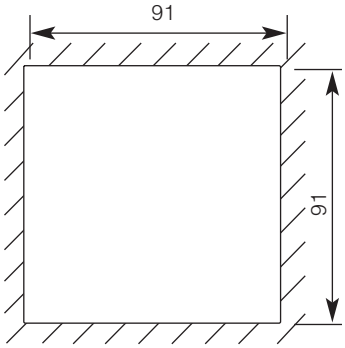

FORATURA
DRILLING

145

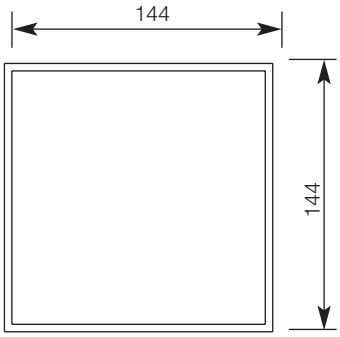

DIMENSIONI DI INGOMBRO
OVERALL DIMENSIONS

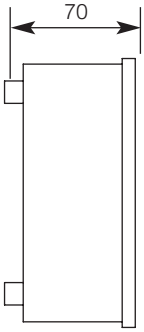

PROFONDITA'
DEPTH

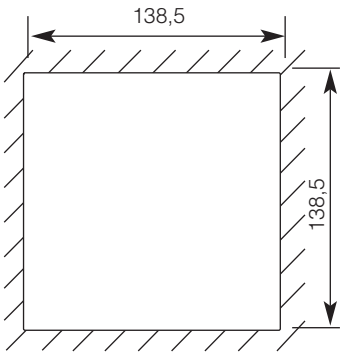

FORATURA
DRILLING

146

7. CONTROL PROTECTION MULTIMETER MCP-4

Control and protection multimeter MCP4 is utilized in the most complete power factor correction systems and in filters in addition to the reactive power controller to guarantee a more precise and reliable capacitor banks protection.

MCP4 multimeter in fact, enables monitoring voltages, currents and THD of all phases, system frequency and cabinet internal temperature; it has a relay contact for the remote carry-over of a cumulative alarm.

LED INDICATION AND DISPLAY

The LED, that are present and the display of the multimeter MCP4 give the following information

- Measure of the electric parameter indicated
- Fan status
- ON/OFF status

Generalities

- Microprocessor device
- Measured values: tension, current, THD%, temperature
- Displayed value indication led
- Fan status indication led
- Manual reset set-up indication led
- Alarm trip indication led
- Terminal strip connection
- Relays 250Vac-5A
- CEI EN 61010-1 CEI EN 50081-2 CEI EN 50082-2 Applicable standards

TYPE	MCP4
CODE	A25060044100010
AUX. SUPPLY	115V (230V-400V on request)
FREQUENCY	50/60Hz
MEASURE VOLTAGE CIRCUIT	80V ÷ 540V
MEASURE CURRENT CIRCUIT	5A (1A on request)
BURDEN	4VA
VOLTAGE MEASURING ACCURACY	±1%
CURRENT MEASURING ACCURACY	±1%

THD CURRENT MEASURING ACCURACY	±1% for Irms >10% ±5% for Irms <10%
TEMPERATURE MEASURING ACCURACY	±1°C
DISPLAY	Yes
ALARM RELAY	cumulative
PROTECTION DEGREE	IP40
WEIGHT	0.45Kg
WORKING TEMPERATURE	0°C ÷ +55°C
STORAGE TEMPERATURE	-20°C ÷ +70°C
RS232 SERIAL EXIT	Yes
DIMENSIONS (SEE PAGE 16)	144

8. THYRISTOR SWITCHES

Thyristor switched capacitor bank is the best and sometimes the sole choice when it is necessary to compensate loads over short periods of time. Examples are steel companies, lifting apparatus (cranes, quay cranes, etc), cable makers (extruders, etc), welding machines, robots, compressors, skiing lift stations, LV industrial networks(chemical plants, paper mills, automotive suppliers).
Thyristor switched capacitor bank are also an ergonomic solution where noise can be problematic, like hotels, banks, offices, service infrastructures (telecommunications board, informatics 'boards, hospitals, malls).

Limits of the traditional contactor switched banks
- High inrush current and over voltages
- Risk of over voltages due to the arc breaking
- Longer reconnecting time: more than 30 sec
- More demanding maintenance compared with static switches.

General advantages of Power Factor Correction
- Reduced losses on mains and power transformers
- Increase of plant available power
- Less voltage drop in the plant

Thyristor switched capacitor bank benefits include:
- Minimises network disturbances such as Voltage Drop and Flicker
- No moving parts therefore reduced maintenance (i.e. no Electro-magnetic contactors)
- Enhanced capacitor life expectancy.

In general there is a comprehensive PLANT EFFICIENCY; because power factor correction is fast, the power transformer and line design can be done considering only the actual load. Therefore longer working life and reliability of plant. Static switches allow unlimited operations. Steps switching is also done limiting transient phenomena that inside normal plants stresses the capacitors reducing their working life.

8.1 GENERAL CHARACTERISTICS

ICAR SINCHRO FAST SWITCH FEATURES are described below:
- Switching speed: 60ms
- Electronic components: SCR
- Connectable power: up to 100kvar-400/415V
- Possibility to switch capacitors without reactor
- Fan dedicated to the cooling radiator
- Protection circuit with signalling LED

Further ADVANTAGES
1. Possibility to use SFS with ICAR RPE 12BTA regulator.
2. The control technology adopted doesn't allow switching that could generate self damage.
3. Very small dimensions.
4. High temperature protection.
5. Protection from high speed switching.
6. SFS doesn't need any external supply.

8.2 TECHNICAL DATA SHEETS AND TABLES

TECHNICAL CHARACTERISTICS	
Voltage	400-415V
Frequency	50Hz (60Hz on request)
Activation	Using external contact voltage free (type SSR Bi-directional opto-mos recommended); no need for 24Vdc
Fuse (not included)	NH00 Super Fast
Duty cycle max speed	60ms ON – 60ms OFF
Power circuit	L1-L2: 25mm² for SFS50/HS and SFS50B/HS (L3: 2,5mm² on the main supply side only) L1-L2: 50mm² for SFS80/HS (L3: 2,5mm² on the main supply side only)
Operating ambient temperature	0÷50°C

Order Code	Identification	Switching Power [Capacitors]	Switching Power [Capacitors and Reactors]	Dimensions (mm) [WxHxD]	Weight (kg)
A25060043842751	SFS50/HS	60kvar	38kvar	195x140x100 (fig.1)	3,5 Kg
A25060043842754	SFS50B/HS	-	50kvar	236x140x125 (fig.2)	5,5 Kg
A25060043843150	SFS80/HS Available on 2009	100kvar	80kvar	236x140x125 (fig.2)	5,7 Kg

8.3 CONNECTING DIAGRAM

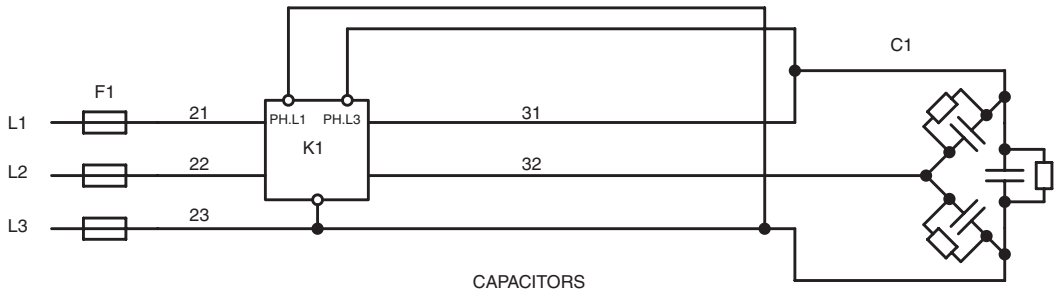

CAPACITORS

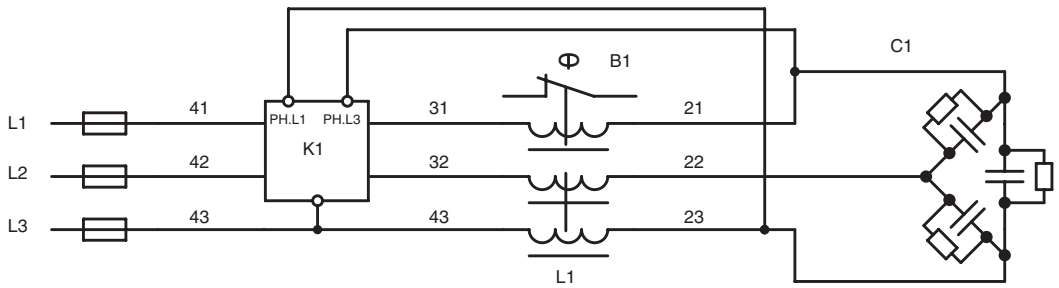

CAPACITORS AND REACTOR

8. THYRISTOR SWITCHES

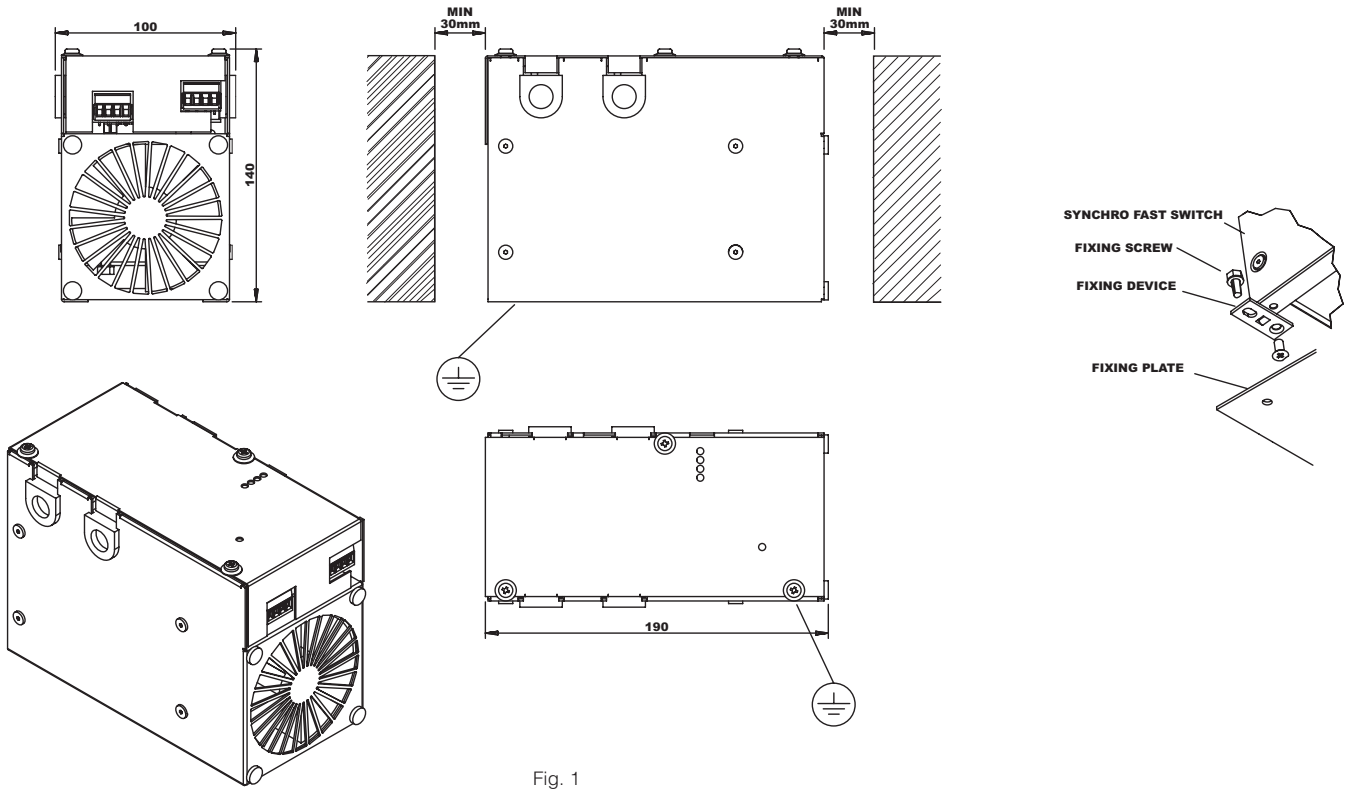

Fig. 1

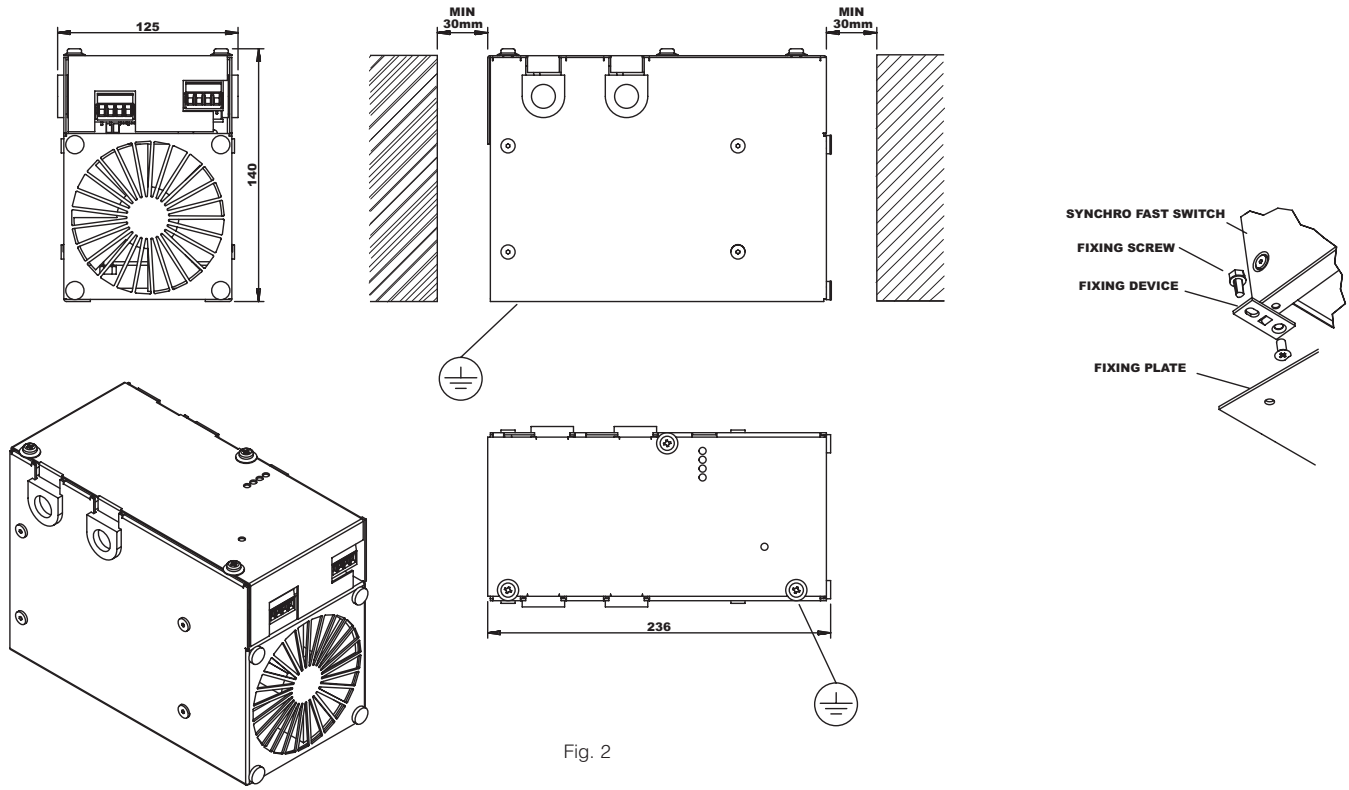

Fig. 2

ICAR S.p.A.
Via Isonzo, 10
20052 Monza (Mi) - Italy
tel. +39 039 83.951
fax +39 039 83.32.27

www.icar.com
sales@icar.com

ICBR09A0908