HEP ower for light

Model : LCC30W700

230V AC

Approval Marks

Certified

EN 61347-1:2008+A1:2011
EN 61347-2-13:2006
EN 62384:2006+A1:2009

Electronic

Parameter	Conditions	Min	Nom	Max	Unit
I/P Voltage Range		198	220-240	264	Vac
Input Frequency		-	50-60	-	Hz
Output Power(Pout)	High Power LED	19.6	-	26.6	W
Input Current(Iin)	25°C,Nominal Input@230VAC	-	140	-	mA
Output Voltage(Vout)		28	-	38	V
Output Current(Iout)	25°C,Nominal Input	665	700	735	mA
Efficiency	Full Load	80	-	-	%
Ripple & Noise	<50% for 20kHz or higher and <40% for 120Hz ripple				
Rise Time		-	-	500	ms
Start-up Delay		-	-	500	ms
Power Factor	Full Load	0.90	0.95	-	%
THD		-	-	30	%
Protection	Over-voltage Protection	Auto recovery			
	Open-circuit Protection	-	50	-	V
	Short-circuit Protection	Auto recovery			
Safety-Standards		Class II			
Sound Rated		inaudible 24 dBA			
External Operating Temperature		-20	-	+50	°C
Internal Fixture Operating Ambient Temperature		-	-	+60	°C
Storage Temperature Range		-40	-	85	°C
Operating Humidity range		10	-	95	%
Case hot spot Temperature(TC)	at External Operating Temperature 40°C	-	-	+75	°C
Lifetime	at Ta= 40°C	-	50,000	-	hrs
Max. cable length	Secondary side	-	-	2	M

Lamp Type

High Power LED or COB LEDs

Application Space

Indoor Use , potted
(Low Humidity, No Condensation)

HEP ower for light

Model : LCC30W700

230V AC

Approval Marks

Certified

EN 61347-1:2008+A1:2011
EN 61347-2-13:2006
EN 62384:2006+A1:2009

Physical

Parameter

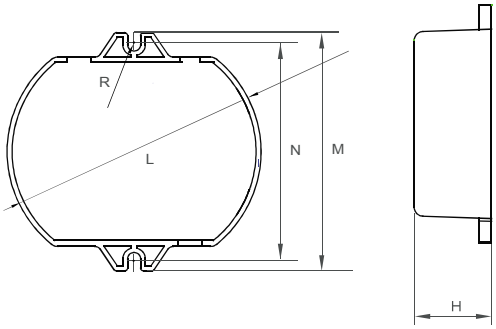

L : 79.8 mm H : 25.4 mm
M : 78.1 mm R : 2 mm
N : 70.1 mm

Tolerance : ≥0 ~ 100 ≥ +/-0.5mm
100 ≥ +/-1 mm

Terminal Block : Hard Wires : PRI : Brown / Blue
SEC : Red / Black

Housing Material : Polycarbonate
: Lead-Free, Comply With RoHS

Label : Surface Print
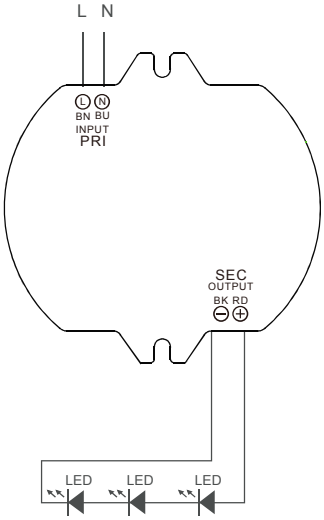
Wiring Diagram